Plant, Cell and Environment (2001) **24,** 781–790

Influence of temperature and soil drying on respiration of individual roots in citrus: integrating greenhouse observations into a predictive model for the field

D. R. BRYLA,[1] T. J. BOUMA,[1]* U. HARTMOND[2] & D. M. EISSENSTAT[1]

[1]*Department of Horticulture, The Pennsylvania State University, University Park, PA 16802, USA and* [2]*Citrus Research and Education Centre, University of Florida – IFAS, Lake Alfred, FL 33850, USA*

ABSTRACT

In citrus, the majority of fine roots are distributed near the soil surface – a region where conditions are frequently dry and temperatures fluctuate considerably. To develop a better understanding of the relationship between changes in soil conditions and a plant's below-ground respiratory costs, the effects of temperature and soil drying on citrus root respiration were quantified in controlled greenhouse experiments. Chambers designed for measuring the respiration of individual roots were used. Under moist soil conditions, root respiration in citrus increased exponentially with changes in soil temperature (Q_{10} = 1·8–2·0), provided that the changes in temperature were short-term. However, when temperatures were held constant, root respiration did not increase exponentially with increasing temperatures. Instead, the roots acclimated to controlled temperatures above 23 °C, thereby reducing their metabolism in warmer soils. Under drying soil conditions, root respiration decreased gradually beginning at 6% soil water content and reached a minimum at <2% soil water content in sandy soil. A model was constructed from greenhouse data to predict diurnal patterns of fine root respiration based on temperature and soil water content. The model was then validated in the field using data obtained by CO_2 trapping on root systems of mature citrus trees. The trees were grown at a site where the soil temperature and water content were manipulated. Respiration predicted by the model was in general agreement with observed rates, which indicates the model may be used to estimate entire root system respiration for citrus.

Key-words: Root distribution; simulation; soil water content; temperature.

Correspondence: David Bryla. Present address: USDA, ARS, PWA, 2021 South Peach Avenue, Fresno, CA 93727, USA. Fax: +1 559 4533122; e-mail: bryla@spininternet.com

*Present address: Netherlands Institute of Ecology, Centre for Estuarine and Coastal Ecology, 4400 AC Yerseke, The Netherlands.

INTRODUCTION

In both natural and agricultural systems, root respiration represents a substantial cost to the overall carbon economy of a plant. Lambers, Atkin & Scheurwater (1996a) estimate that roots consume 8–52% of the carbon fixed daily during photosynthesis to supply energy for new root construction, ion uptake and maintenance. Respiratory energy is also required to support associations with symbiotic organisms such as mycorrhizal fungi (Peng *et al*. 1993; Nielsen *et al*. 1998) and nitrogen-fixing bacteria (Ryle *et al*. 1984), as well as for defence against fungal pathogens (Singh & Singh 1971; Uritani & Asahi 1980).

A variety of factors influence the rate at which carbon is consumed during respiration, including differences among species (Poorter *et al*. 1991; Lambers *et al*. 1996a), plant age (Poorter & Pothmann 1992), and growth conditions (Greenway & West 1973; Farrar 1981; Lambers, Stulen & van der Werf 1996b; Zog *et al*. 1996). However, in well-aerated, mature field systems, the effects of soil moisture and temperature typically dominate (e.g. Maier & Kress 2000). Other factors such as mean root age, nutrient availability (unless amended with fertilizer), and microbial associations remain relatively constant over time (Marschner 1995; Smith & Read 1997). Their effects on root respiration are usually undetectable during short- or long-term measurements. Consequently, moisture and temperature are often considered the main driving variables used to model root respiration (e.g. Carlyle & Ba Than 1988; Alm & Nobel 1991; Burton *et al*. 1998). Such models can explain a significant portion of the observed variation in CO_2 evolution from soils and roots.

Ordinarily, plant respiration increases exponentially as a function of temperature under normal growing conditions (Salisbury & Ross 1996). Based on this observation, the effects of temperature on root respiration would be easily defined for a particular species. This also suggests that respiratory costs would be higher in warmer soils. However, root respiration has been shown to acclimate to contrasting temperatures in certain species, including six grass (Smakman & Hofstra 1982; Fitter *et al*. 1998; Gunn & Farrar 1999) and five boreal tree (Tjoelker, Oleksyn & Reich 1999) species. When acclimation occurs, temperature-based predictions of respiration become more difficult. The relationship

© 2001 Blackwell Science Ltd

between temperature and respiration is further complicated when soil moisture conditions are also considered because respiration typically declines as soil water is depleted (Palta & Nobel 1989a, 1989b; Burton *et al*. 1998). Consequently, existing respiration models may be inappropriate under certain conditions for many species.

The purpose of this study was to develop a model for estimating root respiration of mature citrus trees. An earlier study showed that respiration by citrus roots acclimates to warm soil temperatures and slows during drought (Bryla, Bouma & Eissenstat 1997). The model in the current study was based on data collected in the greenhouse, and included terms for temperature, temperature acclimation, and soil moisture. To characterize root respiratory responses to changes in soil conditions, small chambers designed for measuring individual root branches *in situ* were used. These chambers enabled us to manipulate only a portion of the root system without affecting the entire physiology of the tree. The model was validated using data collected in the field on full-grown trees.

MATERIALS AND METHODS

Soil conditions and fine root distribution in the field

Fine root length density (<2 mm in diameter) was determined at various soil depths on 20-year-old 'Valencia' orange [*Citrus sinensis* (L.) Osbeck] trees grown in a rootstock trial located 7 km south-east of Avon Park, FL, USA. Soil at the site is a deep, uniform, Astatula fine sand (Typic quartzipsamment) with low cation-exchange capacity, low organic matter (<1%), low water-holding capacity, and essentially no horizontal development or soil structure. Trees were budded to six different rootstocks, planted 4·6 m apart within rows and 6·2 m apart between rows, and arranged in a completely randomized block design in groups of three trees per block. The rootstocks were: Carrizo citrange (CC) [*C. sinensis* (L.) Osb. × *Poncirus trifoliate* (L.) Raf.]; Cleopatra mandarin (CM) (*Citrus reticulata* L.); Swingle citrumelo (SC) (*Citrus paradisi* Macf. × *P. trifoliate*); sour orange (SO) (*Citrus aurantium* L.); trifoliate orange (TO) (*P. trifoliate*); and Volkamer lemon (VL) (*Citrus volkameriana* Tan. & Pasq.). The ranking of rootstocks based on the size of canopy volume at 10 years of age was VL ≈ CM ≈ CC > SO >> SC > TO. The ranking based on root fineness or specific root length [cm root g^{-1} dry weight (DW)] was TO >> VL > CC > SC > CM ≈ SO (Graham & Syvertsen 1985; Eissenstat 1991).

Soil temperature and water potentials were monitored continuously during 1994 and 1995 under six trees on sour orange rootstock. Soil temperature was measured using copper–constantan thermocouples buried 5 cm deep, and soil water potentials were measured using calibrated WaterMark soil moisture sensors (Ben Meadows Company, Inc., Atlanta, GA, USA) buried 15 and 40 cm deep. The thermocouples and moisture sensors were located 1 m from the base of the trees and read hourly using a datalogger (Model 21X; Campbell Scientific Inc., Logan, UT, USA).

In mid-March 1995, soil cores (5 cm diameter) were collected from beneath the canopy of 48 trees (six rootstocks × eight replicates) in 0–10 cm, 10–20 cm, 20–30 cm, 30–60 cm and 60–100 cm depth increments. To eliminate any overlap between rootstocks, cores were collected from the middle tree in each block. A second set of cores was also collected from the top 10 cm of soil beneath each tree and divided into depth increments of 2 cm. Each core was taken 1 m from the base of the trees and stored at 5 °C before processing. Roots were washed from the soil cores, stained with neutral red to enhance their contrast, and imaged using a flatbed scanner (HP ScanJet II; Hewlett Packard, Palo Alto, CA, USA). Root lengths were measured from the scanned images using image-analysis software (Delta-T SCAN; Delta-T Devices Ltd, Cambridge, UK), and divided by the soil volume to calculate root length density.

Single root respiration in the greenhouse

The response of root respiration to changes in soil conditions was measured on 2-year-old sour orange trees located in a ventilated glasshouse at the Pennsylvania State University in Centre County, PA, USA. Trees were grown in 20 dm^3 pots filled with Candler fine sandy soil (Typic quartzipsamment with 0·1% organic matter) collected from the Citrus Research and Education Centre in Lake Alfred, FL, USA. Respiration experiments were limited to only one rootstock because a considerable amount of labour and resources was required for these experiments. Data collected in the greenhouse experiments described below were used to develop a model for estimating respiration in the field.

Chamber for measuring single root respiration

A chamber was designed to measure respiration of a single branch of fine roots growing in soil (Fig. 1). The chamber bottom was constructed from a 10 cm polyvinyl chloride (PVC) plastic tube (5 cm inner diameter), cut in half and glued to a PVC frame (11·5 cm × 8·5 cm × 0·5 cm). Plastic plates were glued to the ends of the half tube to create a compartment for soil. Small brass fittings were threaded into the end plates to attach flexible Bev-A-Line® (Thermoplastic Processes, Inc., Stirling, NJ, USA) tubing for air inlet and outlet. A U-shaped, stainless steel tube (0·8 cm outer diameter) was inserted inside the chamber to circulate water from a heated/refrigerated water bath to control chamber temperature. The chamber lid was made from clear Plexiglas® (Rohn & Haas Co., Philadelphia, PA, USA) (8·5 cm × 11·5 cm × 0·5 cm), and provided a means to monitor root growth after a chamber was installed. All plastic was covered with clear Teflon® (E.I. Dupont de Nemours & Co., Wilmington, DE, USA) tape to prevent the chamber from absorbing CO_2 during measurements. Some 3 mm foam (H-O Products, Winsted, CT, USA) was used to provide an airtight seal between the chamber

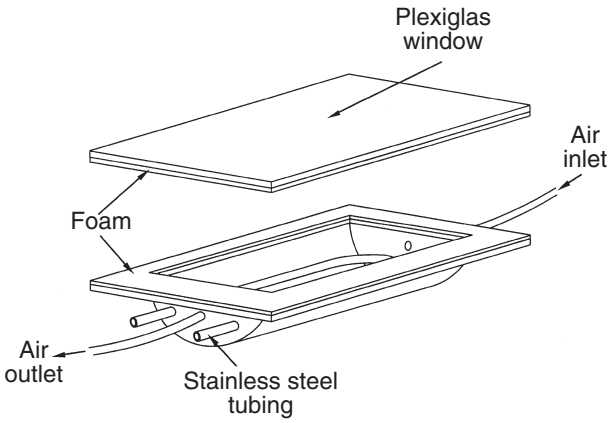

Figure 1. Schematic illustration of a chamber for measuring respiration on intact single-root branches. The lid of the chamber is 8·5 cm wide by 11·5 cm long. Water from a heated/refrigerated water bath is circulating through the stainless-steel tubing to control chamber temperature.

bottom and lid, and protect the roots from damage when the lid was clamped to the chamber bottom (using aluminium channelling). Twelve chambers were constructed for the greenhouse studies.

To attach a chamber to a plant, a single branch of fine roots (<1·5 mm diameter) was uncovered (from a depth of about 5–15 cm), surface sterilized by dipping it into 0·5% NaOCl for 1 min (to reduce the effects of microorganisms), and rinsed several times with distilled water. The root branch was then placed over the surface of the chamber filled with autoclaved Candler soil. Individual roots that were longer than the chamber were allowed to exit the opposite side and grow both inside and outside the chamber. Citrus worked well for this procedure because the roots are relatively coarse (average fine root diameter of sour orange was approximately 0·6 mm) in comparison with most species, and are easily manipulated. Care was taken to minimize any damage to the roots during handling. The temperature inside the chamber was monitored with a 0·25-mm-diameter copper–constantan thermocouple placed near the roots at the centre of the chamber, and was recorded with a datalogger (model CR7; Campbell Scientific Inc.). Time domain reflectometry (TDR) probes (unbalanced design with stainless-steel rods 8 cm long and 1·6 mm in diameter) were placed near the centre of the chamber to measure changes in soil water content (Topp 1993) using a Tektronix cable tester and specialized software (developed at the Department of Plant, Soils and Biometeorology, Utah State University, Logan, UT, USA). The lid was then clamped over the root branch, and the edges around the lid were sealed with flexible sealant (Terostat®; VII, Heidelberg, Germany) to prevent air leaks. The chamber was buried with the root branch oriented in its original position. Roots were allowed to adjust to the chamber environment for 24 h before respiration measurements were initiated. The chambers were watered during measurements by injecting water through the chamber air inlet and draining any excess water by disconnecting the air outlet from the system for 1 h.

Measuring single root respiration

The rates of respiration were determined by measuring CO_2 efflux from the root chambers using an open-circuit gas-exchange system with an infrared gas analyser (model LI-6252; Li-Cor Inc., Lincoln, NE, USA). The analyser was set to differential mode. The system, described by Bouma *et al.* (1997a), rotated automatically among 12 chambers at a 4 min interval. The efflux rates for each chamber were averaged and collected automatically every 4 h. Incoming air to the chambers was controlled at 1000 μmol mol^{-1} CO_2 and humidified to 95% relative humidity by bubbling the air through water. Airflow through the chambers was controlled at a rate of 500 cm^3 min^{-1}.

Roots inside the chambers were traced on clear acetate at the beginning and end of each experiment to measure changes in total root length. The root length was then divided by specific root length (cm of root per mg; Eissenstat 1991) to estimate average daily changes in root weight. Background soil respiration was also estimated during experiments by measuring chambers containing only Candler soil (installed under the same conditions as chambers with roots). However, CO_2 produced by soil organisms living in the rhizophere (i.e. rhizosphere microbial respiration) was assumed to be derived from plant-based C sources and was not treated separately from CO_2 produced by root respiration.

At the end of the experiments, the roots inside the chambers were harvested and oven-dried (60 °C) for at least 48 h. Respiration of roots inside the chambers was calculated as total (root + soil) respiration minus mean background soil respiration divided by root dry weight (proportionally adjusted for average daily changes in root growth measured from root tracings).

Reliability of single root respiration measurements

A preliminary study was conducted to test the reliability of single root respiration measurements (data not shown). Respiration was continuously measured for 2 weeks on six sour orange trees. Three control chambers containing no roots, and three 1·4 L root/soil chambers containing the whole root system of 6-month-old sour orange seedlings [see Bouma *et al.* (1997a) for details on whole root system measurements] were also measured. We found that specific root growth rate (m m^{-1} d^{-1}) and respiration were very similar between roots measured in whole root and single root chambers (i.e. within 4–5% on average; data not shown). Background (soil) respiration measured on chambers containing no roots accounted for < 10% of the total respiration measured on chambers with roots, regardless of changes in soil temperature and moisture.

Quantifying responses to changes in soil temperature and soil moisture conditions

In spring 1998, two sets of experiments were designed to independently measure the response of single root respiration to changes in temperature and soil moisture. We also examined the response of single root respiration to changes in soil CO_2 levels in a third set of experiments. However, because we found respiration was not affected by soil CO_2 (confirming results of previous experiments by Bouma *et al.* 1997a, 1997b), these data are not shown. The mean daily maximum instantaneous quantum flux (400–700 nm) during experiments was 1240 μmol m^{-2} s^{-1}. Mean air temperature was 23 °C and varied between 12 and 36 °C.

To determine respiratory response to temperature, single root experiments were conducted where chamber temperatures were either (1) allowed to fluctuate diurnally with ambient soil conditions, or (2) adjusted in 5 °C increments (every hour) between 10 and 40 °C, or (3) maintained at various temperatures between 10 and 40 °C (± 1 °C). In the first two experiments, chambers were installed on six trees (plus three control chambers containing only soil). Respiration was measured continuously for 12 d in the first experiment, and 8 h in the second experiment. In the third experiment, chambers were installed on nine trees (plus three control chambers). Respiration was then measured continuously for 6 d on chambers controlled at 15, 25, or 35 °C [three chambers (plus one control chamber) per treatment]. The third experiment was repeated using roots maintained at 10, 20, 30 or 40 °C for 6 d (three chambers per treatment). In the first and third experiments, the chambers were watered every 2 d.

To determine respiratory response to soil drying, water was withheld for 10 d from chambers controlled at 15, 25 or 35 °C. Three chambers (plus one control chamber) were installed for each temperature treatment. Changes in soil water content inside the chambers were recorded every 4 h during daylight.

Root respiration in the field

The response of root respiration to temperature and soil moisture was examined in the field on 9-year-old, bearing grapefruit (*C. paradisi*) trees (3·35 m tall and 3·25 m canopy diameter planted in 5·7 m × 2·4 m spacings) on sour orange rootstock. The trees were grown at the Citrus Research and Education Centre, Lake Alfred, FL, USA in a deep, uniform Candler soil. In May 1995, stainless-steel grids (5 cm × 5 cm mesh, 1·2 m × 1·8 m in size) were buried 2 cm beneath the soil surface (centred 0·4 m from the tree base) on the east and west side of six adjacent replicate trees. Before installing the grids, flexible PVC tubing (8 mm diameter) was attached to the underside of the grids in a spiral pattern (lines spaced 10 cm apart). Soil (at the 5 cm depth) on one side of each tree was heated to approximately 10 °C above ambient by circulating hot water from a water heater through the tubing [see Hillier, Sutton & Grime (1994) for technical details]. Soil on the other side of each tree was unheated. Half of each root system (north or south side) was also allowed to dry using rainout shelters (1·8 m × 1·2 m), whereas the other half was irrigated with 10 mm of water three times per week using a microjet sprinkler (180° wetting pattern) placed near the base of each tree. All together, there were four soil treatments beneath each tree: (1) ambient temperature and irrigated; (2) ambient temperature and dry; (3) heated and irrigated; and (4) heated and dry. Temperature and moisture treatments beneath each tree were randomly assigned.

In three replicate locations per treatment (1 m from the tree base), soil temperature was monitored continuously with copper–constantan thermocouples buried 5 cm deep and moisture was monitored with TDR probes (30-cm length) installed diagonally 0–15 cm deep. Thermocouple and TDR data were collected every 30 min and recorded as hourly averages using a Campbell Scientific 21X datalogger (Campbell Scientific Inc.).

Root respiration was measured every 2–4 weeks in each treatment (six replicates per treatment) by trapping CO_2 evolving from the soil surface over a 24 h period in 20 cm^3 of 0·2 M NaOH solution and titrating with 0·1 M HCl and Thymol blue as a pH indicator (Raich, Bowden & Steudler 1990). The CO_2 traps were constructed from PVC pipe (10 cm diameter × 10 cm length) and end caps, and had a volume of 800 cm^3. Wire mesh (1 cm × 1 cm) suspended inside the traps supported the NaOH solution (in a 50 cm^3 container) 3 cm above the soil surface. Traps were inserted approximately 2 cm into the soil (creating an enclosure) and 0·75–1·0 m from the tree base within a treatment plot. Respiration was also measured on soil containing no roots (root were excluded using a 75 cm aluminium cylinder) to correct for background soil respiration. As in the greenhouse experiments, CO_2 produced by heterotrophic organisms living in the rhizophere was not separated from CO_2 produced during root respiration. Background soil respiration represented 5–14% of the total root–soil respiration measured in the field throughout the year.

At the end of the experiment, roots were collected at each treatment location using a 5 cm × 20 cm soil core, rinsed, oven-dried and weighed. The root respiration for each treatment was calculated as total (root + soil) respiration minus mean soil respiration divided by root dry weight [weights were adjusted for seasonal changes in root growth and death based on minirhizotron observations; minirhizotron tubes (1 m long, 6 cm diameter) were installed near the centre of each temperature/moisture treatment at a angle of 30° from vertical and images were collected every 2 weeks using a miniaturized camera system (Bartz Technology Co, Santa Barbara, CA, USA)].

On two occasions, respiration measured at the site with CO_2 traps was compared (in the same position) with instantaneous measurements made using a dynamic CO_2 chamber (model LI-6000–09; Li-Cor Inc.) connected to a closed gas-exchange system (model LI-6200; Li-Cor Inc.). This was carried out to determine the comparability of the methods. All temperature and moisture treatments were measured. In general, dynamic chamber measurements were higher

than those made with CO_2 traps, particularly when CO_2 flux rates were high; Grogan (1998) found a similar response. Measurements were related by the following logarithmic regression equation: CO_2 trap measurement = 2·12 × ln(dynamic measurement) – 0·79 (r^2 = 0·76; P < 0·01).

RESULTS

Soil conditions and fine root distribution in the field

At the Avon Park site, temperatures during the day fluctuated considerably in the upper soil layers. Between May and October 1994, maximum soil temperatures near the surface (5 cm depth) were typically > 30 °C, whereas at night, temperatures dropped to about 15 °C. The sandy soils also tended to dry rapidly at shallow depths throughout the growing season. Within a week without rain or irrigation, soil at 15 cm depth dried to < 2% soil water content and reached water potentials much less than –1·5 MPa. However, despite the variable conditions that occurred near the soil surface, in six citrus rootstocks, 50–63% of the fine roots located in the top metre of soil were found growing in the top 10 cm of soil (Fig. 2). In fact, the highest root length density for each rootstock was 2–6 cm below the soil surface (Fig. 2, inset). As described below, we examined how environmental extremes in moisture and temperature associated with shallow soil depths affected root respiration in citrus.

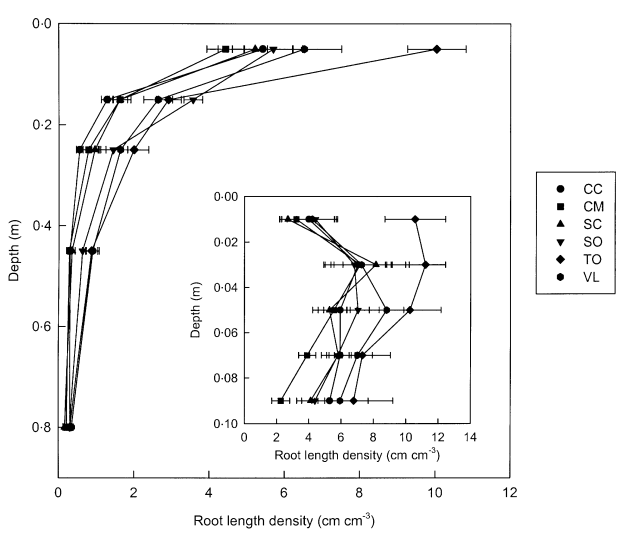

Figure 2. Fine root distribution of six citrus rootstocks in the top 1 m of soil at Avon Park, FL, USA. The points represent the average root length density measured in 10 cm increments between 0 and 30 cm depth, in a 30 cm increment between 30 and 60 cm depth, and in a 40 cm increment between 60 and 100 cm depth. Inset: root distribution of top 10 cm of soil shown in 2 cm increments. CC, Carrizo citrange; CM, Cleopatra mandarin; SC, Swingle citrumelo; SO, sour orange; TO, trifoliate orange; VL, Volkamer lemon. Error bars represent the SE of the mean (n = 8).

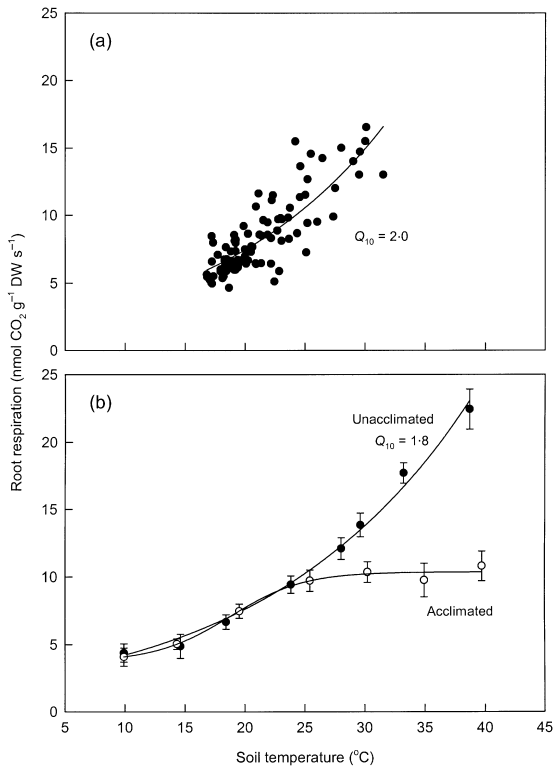

Figure 3. Relationship between respiration of a single branch of fine roots and soil temperature measured on 2-year-old sour orange trees grown in a greenhouse. In (a), soil temperature fluctuated diurnally with changes in ambient soil conditions. The Q_{10} value was calculated using exponential regression analysis (R = 1·86e $^{(0{\cdot}069T)}$; r^2 = 0·69; n = 98; P < 0·01). In (b), soil temperature was controlled at various temperatures for 1 h (●) or 6 d (○). Error bars indicate 1 SE (n = 3). The Q_{10} value for roots controlled at various temperatures for 1 h was calculated using exponential regression analysis ($R = 2{\cdot}33e^{(0{\cdot}059T)}$; r^2 = 0·99; P < 0·01). Roots controlled at various temperatures for 6 d acclimated to warmer temperatures; data were fitted using sigmoidal regression analysis ($R = 3{\cdot}67 + 6{\cdot}68/[1 + e^{-[(T-18{\cdot}9)/3{\cdot}03]}]^{0{\cdot}936}$ with r^2 = 0·99 and P < 0·05).

Single root respiration in the greenhouse

Response to soil temperature

Respiration measured in the greenhouse using single root chambers increased exponentially with increasing soil temperatures whether temperature inside the chambers fluctuated diurnally (Fig. 3a) or gradually increased every hour (in approximately 5 °C increments) from 10 to 40 °C (Fig. 3b). Therefore, in moist soils, the response of root respiration to changing soil temperatures can be estimated using the following standard temperature coefficient (Q_{10}) equation:

$$R_T = [R_{STD}] \times \left[Q_{10}^{\left(\frac{T - T_{STD}}{10}\right)} \right], \quad (1)$$

where Q_{10} is the relative change in respiration that results from a temperature increase of 10 °C, R_T is the predicted

rate of root respiration at any given temperature, T (°C), and R_{STD} is the theoretically maximum respiration rate at some standard temperature, T_{STD} (when moisture is non-limiting). The Q_{10} for sour orange ranged from 1·8 to 2·0 under these conditions. However, when soil temperatures were maintained constant for several days, roots acclimated to temperatures above 23–24 °C (Fig. 3b), thereby reducing their metabolism in warmer soils. To account for temperature acclimation in warmer soils, Eqn 1 was modified as follows:

$$R_T = [R_{STD}] \times \left[Q_{10}^{\left(\frac{T-T_a}{10}\right)} \right], \quad (2)$$

where T_a is the average soil temperature (°C) over the previous period of time that is equivalent to the acclimation period (hours). Equation 2 was used to predict root respiration when soil temperatures were above 23 °C. At lower temperatures, Eqn 1 was used. During the calculations, Q_{10} and T_{STD} were set at 2·0 and 23 °C, respectively, and the acclimation period was estimated as 4 d or 96 h (see below).

The actual and estimated respiration of roots maintained at 15, 25, or 35 °C are plotted over time in Fig. 4. At the beginning of the experiment (time 0), soil temperature in all treatments was near 25 °C and respiration was about 10 nmol CO_2 g^{-1} DW s^{-1}. When roots were maintained at 25 °C, respiration changed very little over time. When temperature was increased to 35 °C, respiration initially doubled (as predicted by a Q_{10} of 2), and when temperature was decreased to 15 °C, respiration decreased by half. However, although the respiration remained constant at 15 °C, respiration of roots maintained at 35 °C gradually declined within 3–4 d to the same rate as measured at 25 °C. After 6 d of measurements, temperature in all treatments was returned to 25 °C. At this time, respiration of roots previously maintained at 15 °C doubled, and respiration of roots previously maintained at 35 °C decreased by half. Respiration of roots from the 35 °C treatment then gradually increased over 3–4 d to the same rate measured in roots maintained at 25 °C. Respiration data collected from the single root chambers was similar to the rates estimated using Eqns 1 and 2 (Fig. 4, inset).

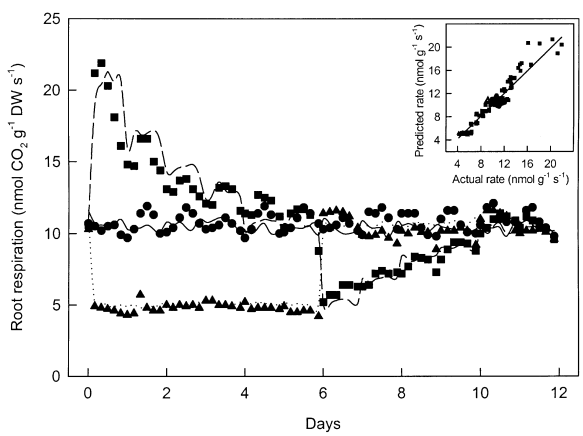

Figure 4. Observed (symbols) and predicted (lines) respiration of single branches of fine roots measured on 2-year-old sour orange trees grown in a greenhouse. At time 0, root temperatures were 26 ± 1 °C. Root temperatures were then controlled at 15 (▲, ·····), 25 (●, ——), or 35 (■, - - - - -) °C for 6 d, and then at 25 °C for another 6 d. Standard errors are omitted from the actual data for clarity, but ranged from 0·01 to 1·48 nmol CO_2 g^{-1} DW s^{-1} at 15 °C, 0·61–1·78 nmol CO_2 g^{-1} DW s^{-1} at 25 °C, and 0·29–1·65 nmol CO_2 g^{-1} DW s^{-1} at 35 °C (n = 3). Inset: relationship between predicted and actual respiration. Data were fitted using linear regression analysis ($R_{predicted} = 0{\cdot}98 \times R_{actual} + 0{\cdot}23$ with $r^2 = 0{\cdot}92$ and $P < 0{\cdot}01$).

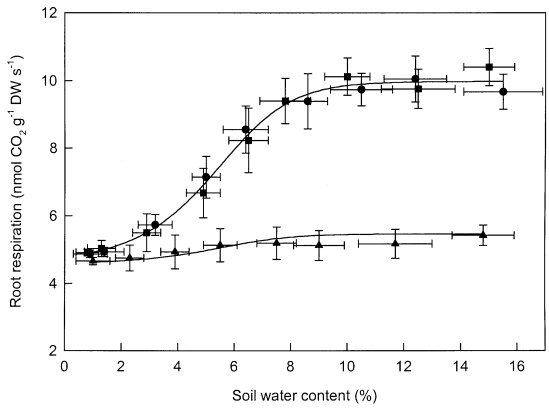

Figure 5. Response of root respiration to changes in soil water content. Measurements were made on a single branch of fine roots from 2-year-old sour orange trees grown in a greenhouse. Root temperatures were controlled at 15 (▲), 25 (●), or 35 (■) °C. Each point represents the daily averages of root respiration and soil water content measured during a 10-day drying period. Error bars indicate 1 SE (n = 3) and points were fitted using the sigmoidal function, $R_{SWC} = 4{\cdot}5 + 5{\cdot}4/[1 + e^{[-(swc - 6{\cdot}1)/1{\cdot}2]}]^{0{\cdot}62}$, which was calculated from data collected at 25 and 35 °C ($r^2 = 0{\cdot}99$, $P < 0{\cdot}01$).

Response to soil moisture

To investigate the effect of soil moisture on root respiration, soil was gradually dried over a 12 d period inside chambers maintained at three temperatures (Fig. 5). In warmer soils, the response of root respiration to soil drying was clear. Respiration at 25 and 35 °C began to gradually decline around 6% soil water content (6 d without water), and finally reached a minimum at less than 2% soil water content (10 d without water). At 15 °C, however, the effect of soil drying on respiration was less marked. Root respiration decreased only slightly in the cooler soil when water content changed from 15 to 1%, but reached the same rate of 4·5 nmol CO_2 g^{-1} DW s^{-1} at 1% soil water content as measured in 25 and 35 °C soils. Root respiration also decreased to about 4·5 nmol CO_2 g^{-1} DW s^{-1} when soil temperature was held at 10 °C (Fig. 3), which indicates that root respiration in citrus maintains a base level of metabolic activity, R_B, during unfavourable soil conditions. Additional respiration, R_A, occurs when soil conditions are more favourable for water and nutrient uptake. Therefore, total root respiration rates, R_{TOTAL}, can be expressed as:

$$R_{TOTAL} = R_B + R_A \quad (3)$$

By applying sigmoidal functions to the data shown in Fig. 5, the effect of changes in soil water content, SWC, on the value of R_A was accounted for by using the following equation:

$$R_{SWC} = R_B + \frac{R_A}{\left[1 + e^{-\left[\frac{SWC-a}{b}\right]}\right]^c}, \quad (4)$$

where a, b and c are fitted constants. As R_B is constant regardless of soil temperature, the effects of soil temperature need only be applied to R_A. To model the effects of soil moisture at various soil temperatures on root respiration, R_{STD} in Eqns 1 and 2 can be replaced by the soil moisture term in Eqn 4. Therefore, at soil temperatures below the acclimation threshold (i.e. less than 23 °C), predicted rates of respiration, R_{PR}, were calculated as:

$$R_{PR} = R_B + \frac{R_A}{\left[1 + e^{-\left[\frac{SWC-a}{b}\right]}\right]^c} \times \left[Q_{10}^{\left(\frac{T-T_{STD}}{10}\right)}\right]. \quad (5)$$

At soil temperatures above 23 °C, R_{PR} was calculated by replacing T_{STD} in Eqn 5 with T_a (see Eqn 2).

When the chambers were finally rewatered after 14 d of drought, respiration recovered fully in less than a day in all temperature treatments (data not shown).

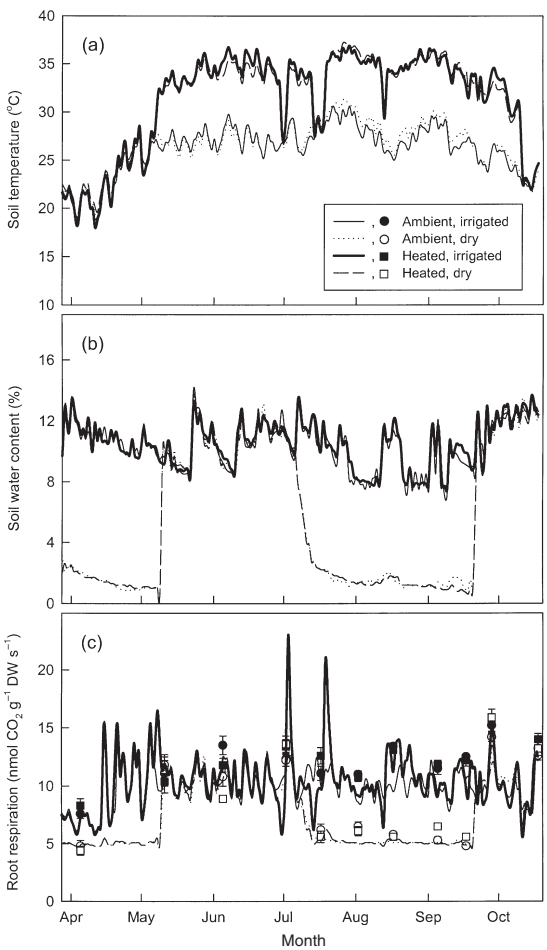

Figure 6. Effects of varying soil temperature and soil moisture on root respiration of 9-year-old red grapefruit trees on sour orange rootstock grown at the Citrus Research and Education Centre in Lake Alfred, FL, USA. Portions of the root system were exposed to ambient or heated temperature conditions, and either irrigated or allowed to dry. (a) Soil temperature measured at 5-cm depth (n = 3). In the heated treatments, temperatures were maintained above ambient using a heating system, except for a few days in July and August when the heating system failed. (b) Soil moisture measured at 0–15 cm depth (n = 3). (c) Observed (symbols) and predicted (lines) root respiration. For the observed data, each point represents the mean of six trees and errors bars indicate 1 SE. Observed respiration was measured using CO_2 traps.

Root respiration in the field

Field data (hourly) were used to validate the respiration model developed above. From May to October 1996, roots from 9-year-old red grapefruit trees on sour orange rootstock were exposed to ambient or elevated soil temperatures (Fig. 6a). Roots were also exposed to wet or dry soil conditions from March to May and July to September 1996 (Fig. 6b). The respiration model predicted root respiration would decrease in dry soil, but would remain unaffected by elevated temperatures (Fig. 6c). Actual respiration measured in the field showed a similar response (Fig. 6c). Averaged over all treatments, predicted respiration was 91 ± 1 (SE)% of the actual respiration observed in the field, and predicted and observed values were significantly correlated (r^2 = 0·87, P < 0·01). Without the acclimation term, T_a, predicted respiration was 37% higher than observed respiration on average (and as high as 127% in some cases), and predicted and observed values were not significantly correlated (r^2 = 0·26). Without the soil moisture terms, predicted respiration was 77% higher than observed values in dry soil, and again, predicted and observed values were not significantly correlated (r^2 = 0·39).

DISCUSSION

Separating the effects of soil temperature and moisture on root respiration is difficult, particularly in the field, where these parameters change continuously and inversely. In citrus, interpreting the effects of soil conditions on root respiration is further complicated by the fact that respiration tends to acclimate to changes in soil temperature and slows during water stress (Figs 3b and 5; Bryla *et al.* 1997; Espeleta & Eissenstat 1998). From controlled greenhouse measurements on individual, intact root branches of citrus, we developed relationships between respiration and changes in soil temperature and soil water content. Using these data, a model was constructed that simulates diurnal rates of respiration. It was found that the model could estimate daily root respiration rates of mature trees with reasonable accuracy (Fig. 6c). Further refinements of the model could

be made, however, by including estimations for coarse root respiration, and by using multiple exponential terms to define the relationship between temperature and root/soil respiration (Atkin, Edwards & Loveys 2000a).

A CO_2 chamber (CO_2 trap) method was used in the field to validate model estimates. When this method was compared with a dynamic chamber method, dynamic measurements were higher than those made with CO_2 traps (see Materials and methods). Nay, Mattson & Bormann (1994) demonstrated on simulated soil surfaces that CO_2 traps containing soda lime tend to underestimate CO_2 efflux because the absorption rate of the alkali material is rarely in equilibrium with the flux being measured. The CO_2 traps used in our study, which contained NaOH, would have similar problems. Static measurements can be adjusted for this bias using a calibration curve (Ewel, Cropper & Golz 1987; Haynes & Gower 1995; Grogan 1998). Then again, large errors in CO_2 flux rates can also occur when using a dynamic chamber if pressure deficits or build-up occur within the chamber (Fang & Moncrieff 1998). Pressure deficits in the dynamic chamber may partially explain why respiration measured with these chambers differed from CO_2 trap measurements. Further explanation may be because dynamic chambers only measure respiration at a single point in time, whereas CO_2 traps integrate the measurement over time (traps were installed for 24 h in the present study). Therefore, respiration measured by CO_2 traps will differ from dynamic measurements depending on daily changes in soil temperature or moisture (Bouma & Bryla 2000). However, despite problems with both methods, relative differences in respiration measured in citrus under different soil conditions were similar regardless of the method used. For example, the ratio of respiration measured under ambient-dry, heated-dry, ambient-wet, and heated-wet conditions was 1 : 0·98 : 1·26 : 1·30 with CO_2 traps, and 1 : 0·99 : 1·30 : 1·34 with a dynamic chamber. The ratio of calculated values using the respiration model was 1 : 0·99 : 1·32 : 1·35.

As a general rule, temperature governed citrus root respiration under moist soil conditions. For example, when soil temperatures fluctuated diurnally, the relationship between root respiration and soil temperature was exponential. Respiration increased by a factor of 1·8–2·0 for every 10 °C increase in soil temperature (Fig. 3; also see Bouma *et al.* 1997a). For most plant species and organs (including roots) grown under normal conditions, the Q_{10} of respiration during short-term changes in temperature is usually around 1·8–2·9 (Salisbury & Ross 1996; Atkin *et al.* 2000a). However, when soil temperatures were held constant, sour orange roots acclimated to warmer soil conditions; root respiration in soils above 23–24 °C gradually declined over several days to a lower threshold level (Figs 3 and 4). Long-term acclimation to cool soil temperatures (= 15 °C for more than 6 d) was not examined, but could also potentially occur during winter months in citrus.

Few studies have demonstrated that respiration acclimates to elevated temperatures. Reports of cold temperature acclimation are more common (Smakman & Hofstra 1982; Körner & Larcher 1988; Fitter *et al.* 1998; Gunn & Farrar 1999; Tjoelker *et al.* 1999; Atkin, Holly & Ball 2000b). We previously found, however, that root respiration in Volkamer lemon acclimated to warm soil temperatures (Bryla *et al.* 1997). Semikhatova (1974 as cited by Larcher 1980) also showed that leaf respiration in *Podophyllum peltatum* acclimated to air temperatures above 20–30 °C. Long-term exposure to elevated temperatures may reduce respiration for several reasons. Diffusion of O_2 across cell membranes may limit respiration under warmer conditions (Salisbury & Ross 1996). Respiration may be further reduced by a combination of the availability of substrate, activity of respiratory enzymes, and demand for respiratory products, especially after extended periods of heat stress (Atkin *et al.* 2000a). Whether plants acclimate to warm or cool temperatures may depend on the environment they are adapted to.

Temperature also influenced the degree to which citrus root respiration responded to changes in soil moisture availability (Fig. 5). When plants are exposed to dry soil conditions, root respiration tends to decrease in many species including wheat (Nicolas *et al.* 1985), sunflower (Hall, Conner & Whitfield 1990), beech (Gansert 1994), sugar maple (Burton *et al.* 1998), and several desert succulents (Palta & Nobel 1989a, 1989b). In the present study, respiration gradually decreased as soil moisture was depleted, which was probably related to reduced root growth (Espeleta & Eissenstat 1998; Espeleta, Eissenstat & Graham 1998), ion-uptake (Eissenstat *et al.* 1999), and maintenance costs associated with tissue activity (Bouma *et al.* 2000) in dry soil. However, the level of reduction greatly depended on soil temperature. Drought-induced reductions in respiration were much more apparent in warm soils than in cool soils. We also found that respiration in completely dry soil was similar at any given temperature. This implies that, regardless of when drought occurs (e.g. summer or winter), carbon costs associated with maintaining roots in dry soil will be constant (Fig. 6c). Although many plants quickly shed roots in dry soil, many others, including citrus, maintain roots under dry conditions for extended periods of time (Eissenstat & Yanai 1997).

Whether measurements are made under controlled or field conditions, the present study outlines the importance of making continuous temperature and soil moisture measurements when predicting rates of root respiration. Carlyle & Ba Than (1988), however, successfully modelled root/soil respiration in pine based on single point measurements of temperature and moisture. This may be because in their study, acclimation did not occur. Temperature acclimation was also absent in two other studies examining root respiration of various conifer species (Sowell & Spomer 1986; Weger & Guy 1991). More research is required before generalizations can be made, but acclimation certainly occurs in some species. Thus, in order to accurately assess total below-ground carbon costs during conditions when soil temperatures remain relatively constant, it is important to consider temperature acclimation when modelling root respiration in these species. For example, roots growing

deeper in the soil profile (below 10 cm) are generally exposed to fairly stable soil temperature (and moisture) conditions. If deeper roots acclimate to warmer (or cooler) temperatures, then respiration of the entire root system will be over (or under) estimated unless acclimation is considered. Temperature acclimation may also be important when considering plant responses to global warming. Our field study showed that citrus root respiration acclimated to warmer soil temperatures even when the temperatures fluctuated diurnally (Fig. 6c). Mean global temperatures are expected to rise by 2–5 °C over the next century, which may increase respiratory metabolism in many plant communities world-wide (Houghton *et al*. 1996; Boone *et al*. 1998). However, if temperature acclimation is widespread among plant families, the influence of elevated temperatures on metabolism may be negated.

ACKNOWLEDGMENTS

We thank K. Kosola, J. Whitbeck, C. Megivern, S. Blackburn, and H. Schran for technical assistance. This research was supported by grants from the National Science Foundation (IBN-9596050) and the United States Department of Agriculture (NRI 94–37107–1024) to D.M.E.

REFERENCES

Alm D.M. & Nobel P.S. (1991) Root system water uptake and respiration for *Agave deserti*: observations and predictions using a model based on individual roots. *Annals of Botany* **67**, 59–65.

Atkin O.K., Edwards E.J. & Loveys B.R. (2000a) Response of root respiration to changes in temperature and its relevance to global warming. *New Phytologist* **147**, 141–154.

Atkin O.K., Holly C. & Ball C. (2000b) Acclimation of snow gum (*Eucalyptus pauciflora*) leaf respiration to seasonal and diurnal variations in temperature: the importance of changes in the capacity and temperature sensitivity of respiration. *Plant, Cell and Environment* **23**, 15–26.

Boone R.D., Nadelhoffer K.J., Canary J.D. & Kaye J.P. (1998) Roots exert a strong influence on the temperature sensitivity of soil respiration. *Nature* **396**, 570–572.

Bouma T.J. & Bryla D.R. (2000) On the assessment of root respiration for soils of different textures: interactions with soil moisture and soil CO_2 concentrations. *Plant and Soil* **227**, 215–221.

Bouma T.J., Bryla D., Li Y. & Eissenstat D.M. (2000) Is maintenance respiration in roots a constant?. In *The Supporting Roots of Trees and Woody Plants: Form, Function and Physiology* (ed. A. Stokes) Developments in Plant and Soil Sciences, Vol. 87, pp. 391–396. Kluwer Academic Publishers, Dordrecht, The Netherlands.

Bouma T.J., Nielsen K.L., Eissenstat D.M. & Lynch J.P. (1997a) Estimating respiration of roots in soil: interactions with soil CO_2, soil temperature and soil water content. *Plant and Soil* **195**, 221–232.

Bouma T.J., Nielsen K.L., Eissenstat D.M. & Lynch J.P. (1997b) Soil CO_2 concentration does not affect growth or root respiration in bean or citrus. *Plant, Cell and Environment* **20**, 1495–1505.

Burton A.J., Pregitzer K.S., Zogg G.P. & Zak D.R. (1998) Drought reduces root respiration in sugar maple forests. *Ecological Applications* **8**, 771–778.

Bryla D.R., Bouma T.J. & Eissenstat D.M. (1997) Root respiration in citrus acclimates to temperature and slows during drought. *Plant, Cell and Environment* **20**, 1411–1420.

Carlyle J.C. & Ba Than U. (1988) Abiotic controls of soil respiration beneath an eighteen-year-old *Pinus radiata* stand in south-eastern Australia. *Journal of Ecology* **76**, 654–662.

Eissenstat D.M. (1991) On the relationship between specific root length and the rate of root proliferation: a field study using citrus rootstocks. *New Phytologist* **118**, 63–68.

Eissenstat D.M. & Yanai R.D. (1997) The ecology of root lifespan. In *Advances in Ecological Research*, **Vol. 27** (ed. I. Holmes), pp. 1–60. Academic Press, San Diego, CA.

Eissenstat D.M., Waley E., Volder A. & Wells C. (1999) Recovery of citrus roots following prolonged exposure to dry soil. *Journal of Experimental Botany* **50**, 1845–1854.

Espeleta J.F. & Eissenstat D.M. (1998) Response of citrus fine roots to localized soil drying: a comparison of seedlings with adult fruiting trees. *Tree Physiology* **18**, 113–119.

Espeleta J.F., Eissenstat D.M. & Graham J.H. (1998) Citrus root responses to localized drying soil: a new approach to study mycorrhizal effects on the roots of mature trees. *Plant and Soil* **206**, 1–10.

Ewel K.C., Cropper W.P. & Golz H.L. (1987) Soil CO_2 evolution in Florida slash pine plantations. 1. Changes through time. *Canadian Journal of Forest Research* **17**, 325–329.

Fang C. & Moncrieff J.B. (1998) An open top chamber for measuring soil respiration and the influence of pressure difference on CO_2 flux measurement. *Functional Ecology* **12**, 319–325.

Farrar J.F. (1981) Respiration rate of barley roots: Its relation to growth, substrate supply and the illumination of the shoot. *Annals of Botany* **48**, 53–63.

Fitter A.H., Graves J.D., Self G.K., Brown T.K., Bogie D.S. & Taylor K. (1998) Root production, turnover and respiration of under two grassland types along an altitudinal gradient – influence of temperature and solar radiation. *Oecologia* **114**, 20–30.

Gansert D. (1994) Root respiration and its importance for the carbon balance of beech saplings (*Fagus sylvatica* L.) in montane beech forest. *Plant and Soil* **167**, 109–119.

Graham J.H. & Syvertsen J.P. (1985) Host determinants of mycorrhizal dependency of citrus rootstock seedlings. *New Phytologist* **101**, 667–676.

Greenway H. & West K.R. (1973) Respiration and mitochondrial activity in *Zea mays* roots as affected by osmotic stress. *Annals of Botany* **37**, 21–35.

Grogan P. (1998) CO_2 flux measurement using soda lime: correction for water formed during CO_2 adsorption. *Ecology* **79**, 1467–1468.

Gunn S. & Farrar J.F. (1999) Effects of 4°C increase in temperature on partitioning of leaf area and dry mass, root respiration and carbohydrates. *Functional Ecology* **13**, 12–20.

Hall A.J., Conner D.J. & Whitfield D.M. (1990) Root respiration during grain filling in sunflower: the effects of water stress. *Plant and Soil* **121**, 57–66.

Haynes B.E. & Gower S.T. (1995) Belowground carbon allocation in unfertilized and fertilized red pine plantations in northern Wisconsin. *Tree Physiology* **15**, 317–325.

Hillier S.H., Sutton F. & Grime J.P. (1994) A new technique for the experimental manipulation of temperature in plant communities. *Functional Ecology* **8**, 755–762.

Houghton J.T., Meira-Fihlo L.G., Callander B.A., Harris N., Kattenberg A. & Marshall K. (1996) *Climate Change 1995: the Science of Climate Change*. Cambridge University Press, Cambridge.

Körner C. & Larcher W. (1988) Plant life in cold environments. In *Plant and Temperature* (eds S.P. Long & F.I. Woodward) Symposium of the Society of Experimental Botany, **Vol. 42**, pp. 25–57. Applied Science Publishers, Cambridge.

Lambers H., Atkin O.K. & Scheurwater I. (1996a) Respiratory patterns in roots in relation to their functioning. In *Plant Roots. The Hidden Half* (eds Y. Waisel A. Eshel & U. Kafkaki) 2nd edn, pp. 323–362. Marcel Dekker, Inc., New York.

Lambers H., Stulen I. & van der Werf A. (1996b) Carbon use in root respiration as affected by elevated atmospheric CO_2. *Plant and Soil* **187**, 251–263.

Larcher W. (1980) *Physiological Plant Ecology* 2nd edn. Springer-Verlag, New York.

Maier C.A. & Kress L.W. (2000) Soil CO_2 evolution and root respiration in 11 year- old loblolly pine (*Pinus taeda*) plantations as affected by moisture and nutrient availability. *Canadian Journal of Forest Research* **30**, 347–359.

Marschner H. (1995) *Mineral Nutrition of Higher Plants* 2nd edn. Academic Press, New York.

Nay S.M., Mattson K.G. & Bormann B.T. (1994) Biases of chamber methods for measuring soil CO_2 efflux demonstrated with a laboratory apparatus. *Ecology* **75**, 2460–2463.

Nicolas M.E., Lambers H., Simpson R.J. & Dalling M.J. (1985) Effect of drought on metabolism and partitioning of carbon in two varieties of wheat differing in drought tolerance. *Annals of Botany* **55**, 727–742.

Nielsen K.L., Bouma T.J., Lynch J.P. & Eissenstat D.M. (1998) Effects of phosphorus availability and vesicular-arbuscular mycorrhizas on the carbon budget of common bean (*Phaseolus vulgaris*). *New Phytologist* **139**, 647–656.

Palta J.A. & Nobel P.S. (1989a) Influences of water status, temperature, and root age on daily patterns of root respiration for two cactus species. *Annals of Botany* **63**, 651–662.

Palta J.A. & Nobel P.S. (1989b) Root respiration for *Agave deserti*: influence of temperature, water status, and root age on daily patterns. *Journal of Experimental Botany* **40**, 181–186.

Peng S., Eissenstat D.M., Graham J.H., Williams K. & Hodge N.C. (1993) Growth depression in mycorrhizal citrus at high phosphorus supply. Analysis of carbon cost. *Plant Physiology* **101**, 1063–1071.

Poorter H. & Pothmann P. (1992) Growth and carbon economy of a fast-growing and a slow-growing grass species as dependent on ontogeny. *New Phytologist* **120**, 159–166.

Poorter H., Van der Werf A., Atkin O.K. & Lambers H. (1991) Respiratory energy requirements of roots vary with the potential growth rate of a plant species. *Physiologia Plantarum* **83**, 469–475.

Raich J.W., Bowden R.D. & Steudler P.A. (1990) Comparison of two static chamber techniques for determining carbon dioxide efflux from forest soils. *Soil Science Society of America Journal* **54**, 1754–1757.

Ryle G.J.A., Arnott R.A., Powell C.E. & Gordon A.J. (1984) N_2 fixation and the respiratory costs of nodules, nitrogenase activity, and nodule growth and maintenance in Fiskeby soybean. *Journal of Experimental Botany* **36**, 1156–1165.

Salisbury F.B. & Ross C.W. (1996) *Plant Physiology* 4th edn. Wadsworth Publishing Company, Belmont, CA.

Singh J.N. & Singh J.N. (1971) Studies in the physiology of host-parasite relationships in Orobanche. I. Respiratory metabolism of host and parasite. *Physiologia Plantarum* **24**, 380–386.

Smakman H. & Hofstra R. (1982) Energy metabolism of *Plantago lanceolata* as affected by change in root temperature. *Physiologia Plantarum* **56**, 33–37.

Smith S.E. & Read D.J. (1997) *Mycorrhizal Symbiosis* 2nd edn. Academic Press. New York.

Sowell J.B. & Spomer G.G. (1986) Ecotypic variation in root respiration rate among elevational populations of *Abies lasiocarpa* and *Picea engelmannii*. *Oecologia* **68**, 375–379.

Tjoelker M.G., Oleksyn J. & Reich P.B. (1999) Acclimation of respiration to temperature and CO_2 in seedlings of boreal tree species in relation to plant size and relative growth rate. *Global Change Biology* **5**, 679–691.

Topp G.C. (1993) Soil water content. In *Soil Sampling and Methods of Analysis* (ed. M.R. Carter), pp. 541–557. Lewis Publishers, Ann Arbor, MI.

Uritani I. & Asahi T. (1980) Respiration and related metabolic activity in wounded and infected tissues. In *The Biochemistry of Plants*, **Vol. 2**. Metabolism and Respiration, (ed. D.D. Davies) pp. 463–485. Academic Press, New York.

Weger H.G. & Guy R.D. (1991) Cytochrome and alternative pathway respiration in white spruce (*Picea glauca*) roots. Effects of growth and measurement temperature. *Physiologia Plantarum* **83**, 675–681.

Zog G.P., Zak D.R., Burton A.J. & Pregitzer K.S. (1996) Fine root respiration in northern hardwood forests in relation to temperature and nitrogen availability. *Tree Physiology* **16**, 719–725.

Received 8 December 2000; received in revised form 18 April 2001; accepted for publication 23 April 2001